PRODUCT SHEET

Description:
Padlockable Cam Lock "Loop", 360DG, CPL, ø18x25mm,Hooked Cam C/E: 39,5mm, Shackle Hole: ø8mm

Item number:
14.04.573-0

Units	Box	Carton	HS Code	Barcode
Pcs.	30	300	8301300000	5704866402989

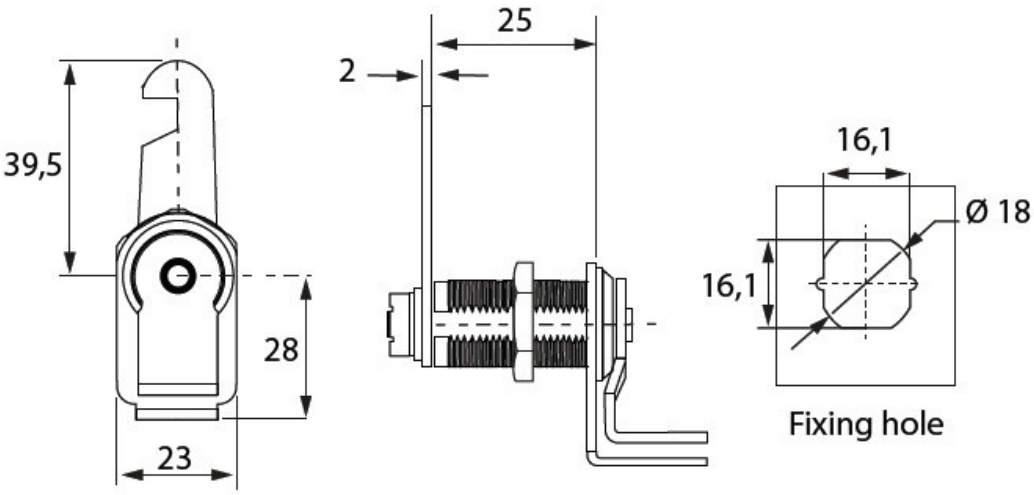

SISO A/S
Mileparken 11
DK-2740 Skovlunde
Denmark
VAT: DK 24786013

Phone +45 45 830 900

www.siso.dk
siso@siso.dk

Danske Bank
Nytorv Branch
Copenhagen
SWIFT: DABADKKK

Account no.
4180 3112 112936
IBAN Account
DK7230003112112936